MODEL RFS – RADIAL FORCE SENSOR

Description

Radial force sensor is strain gage based load cell with full temperature compensation. It is provided with overload protection and it is easy for installation. It is fitted with Self Aligning ball bearing housing. Load sensing element is constructed from tool steel & the outer body is Blackodised aluminum. RFS are provided with Over Lad Protection during operation. RFS are provided with Transit Stops fitter for preventing over load during transportation. RFS are typically applied in pair, one on each end of rotating shaft. RFS makes a significant contribution for more productive operations at an improved quality. Higher capacity version is available upon request.

Features

- 10 to 100 Kgf. capacities offered
- Complete environmental protection – IP 65 class for gage area
- Standard output 1.5 mV/V offered
- Other capacity available on request

Applications

Used for measuring web tension of materials drawn over a rotating roller of

Web processing equipments for:	Web converting equipments for:
Paper	Coating
Foil	Printing
Film	Embossing
Magnetic tape	Slitting
Plastic tape	Laminating
Thin Metal web	Winder / Unwinder
Textile / Non-Wovens	Web Converter

Performance Specification

Standard Capacities	10,20,50,75,100 kgf
Excitation Voltage	10 VDC- Maximum 15 VDC
Nominal Output	1.5 m V/ V
Non - Linearity	< ± 0.2% FSO (Full Scale Output)
Non – Repeatability	< ± 0.1% FSO
Creep (30 minutes)	< ± 0.03% FSO
Zero Balance	± 1.0% FSO
Input Resistance	375 Ohms
Output Resistance	350 Ohms
Insulation Resistance (50 VDC)	> 1000 Mega Ohms
Safe Overload of Rated Capacity	150%
Cable Length (4 Core Screened)	8 mtrs
Temp. Compensated Range	0 ~ 60 ^{0}C
Temperature Effect on Output	< 0.04% FSO/ ^{0}C
Temperature Effect on Zero	< 0.04% FSO/ ^{0}C
Deflection	< 0.5 mm at FSO
Finish & Construction	Sensing element - Tool Steel & Outer body - Blackodised Aluminum
Environmental Protection Class	IP 65
Loading Direction	Towards Dot Mentioned on Cover **(Downward Towards Connector)**

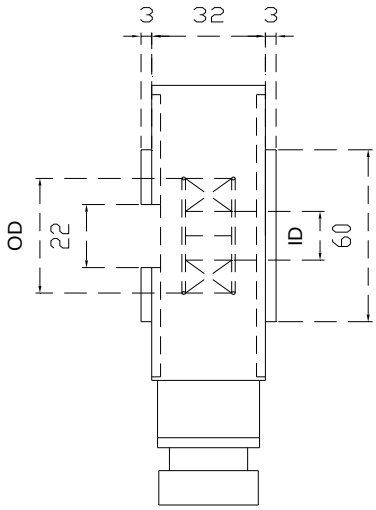

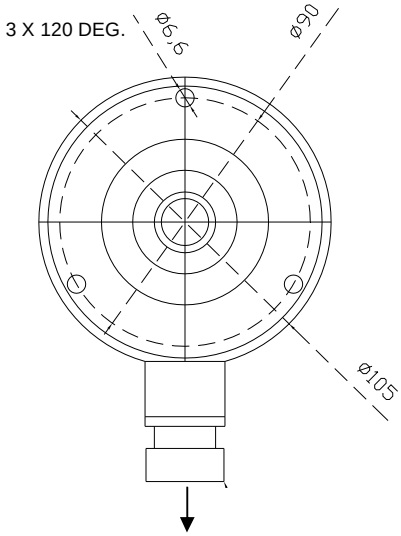

4 PIN MALE & FEMALE CONNECTOR WITH 8 MTR. CABLE

Electrical Termination

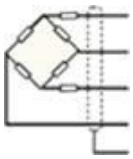

+Input	Red
+Output	Green
-Input	Black
-Output	White
Shield	

BALL BEARING SIZE

ID	OD	WIDTH	BEARING NO
12	32	10	1201
15	35	11	1202
17	40	12	1203
20	47	14	1204

NOTE: ALL DIMENSIONS ARE IN MM

SEEGATE CORPORATION

Swastik House , Building No.382 , 3rd Floor, Room No.7 , Near Lamington Road Police Station , Grant Road (E) . Mumbai -400007.

Tel - 022-40044443 Mobile - 7021525891 , 797338650

Email -sales@seegatecorp.com. Website - www.seegateloadcell.com